Multimedia Tools and Applications (2024) 83:56207–56228
https://doi.org/10.1007/s11042-023-17754-z

ESA-SSD: single-stage object detection network using deep hierarchical feature learning

Hui Liu[1,2] · **Zhenyang Dong**[1]

Received: 6 September 2023 / Revised: 19 October 2023 / Accepted: 24 November 2023 /
Published online: 7 December 2023
© The Author(s), under exclusive licence to Springer Science+Business Media, LLC, part of Springer Nature 2023

Abstract
Object detection, localization and identification based on 3D point cloud data are widely applied in autonomous driving, robotics, augmented reality and other fields. We propose a raw point cloud-based, lightweight and single-stage 3D object detector ESA-SSD, which aggregate contextual features to key points using multi-set abstraction modules. At first, an enhanced feature expression module is utilize to encode the geometric information and feature content of points within the neighborhood for strengthening the feature expression of each point. And then, semantic aware sampling method performs down-sampling for making more foreground points included in the key points and reducing the ineffective learning of the network. To focus the network more on the key features of the object, the spatial attention mechanism is introduced to weight the features at each point. Finally, the center of the instance is estimated with the contextual instance centroid perception module in order to making the context features of the detection object extracted adequately. We performed experimental validation on the publicly available KITTI and DAIR-V2X datasets. On the KITTI dataset, ESA-SSD achieves detection accuracies of 88.58%, 80.26% and 76.80% for the car categories with easy, medium and difficult detection difficulties; on the DAIR-V2X dataset, the detection accuracies for the car categories with three detection difficulties reach 73.21%, 61.62% and 56.99%.

Keywords Deep learning · 3D point cloud · Object detection · Enhanced feature expression · Semantic aware sampling · Attention mechanism

✉ Hui Liu
liuhui@bucea.edu.cn

Zhenyang Dong
dzy07062023@163.com

1 School of Electrical and Information Engineering, Beijing University of Civil Engineering and Architecture, Beijing 102616, China

2 Beijing Key Laboratory of Intelligent Processing for Building Big Data, Beijing University of Civil Engineering and Architecture, Beijing 102616, China

1 Introduction

Object detection, as a critical technology in computer vision, has found wide applications in areas such as autonomous driving and intelligent robotics. Currently, 2D image-based object detection algorithms like YOLO [1–3], SSD [4], and RCNN [5–7] have made significant progress and are extensively used in various domains, including face recognition [8], license plate recognition [9], and pose estimation [10]. 2D object detection operates on images as input, which contain rich semantic information. Moreover, the orderly arrangement of pixels in an image allows for direct utilization of Convolutional Neural Networks (CNNs) to extract image features, ensuring high accuracy in 2D object detection. However, 2D object detection lacks the ability to capture external spatial geometric information such as depth and size of the objects in the image. It is also susceptible to environmental factors. In complex scenarios, object occlusion or unfavorable weather conditions can lead to object loss or reduced detection accuracy. Compared to 2D object detection, 3D object detection mostly uses point cloud data acquired by LiDAR as input to achieve object location and identification comparable to real-world. Compared to image data captured from cameras, point cloud data obtained from LiDAR sensors contains depth information. Using point cloud data for object detection can reduce the effect of object occlusion or bad weather on the detection effect, can achieve better detection results, and more practical and reliable, so it is very necessary to study the object detection technology in 3D point cloud scenes. Because 3D point cloud data is disordered and sparse in space, it is not possible to directly use convolutional neural networks to extract features from the point cloud data. Therefore, 3D object detection is more challenging.

With the improvement of 3D point cloud data acquisition capability, there are numerous methods for object detection using 3D point cloud data. From an overall network architecture perspective, existing 3D object detection models can be categorized into two frameworks: single-stage and two-stage. Single-stage networks are capable of directly outputting the final 3D bounding boxes [11–13], but they may have lower detection accuracy. Two-stage networks generate a certain number of candidate boxes initially and further refine them to obtain the final 3D bounding boxes [14–17]. While two-stage networks achieve relatively higher detection accuracy, their detection speed is slower. From the perspective of data processing, existing 3D object detection algorithms can be mainly categorized into point-based [14, 18, 19], voxel or pillar-based [11–13, 20], point-cloud and voxel fusion-based [15, 16].

Point-based methods directly use the raw point cloud as the input to the network, preserving the geometric and depth information of the point cloud. However, the large number of points in the point cloud leads to low computational efficiency. Voxel or pillar-based methods require preprocessing the point cloud data by converting the unordered point cloud into regular voxels or pillars of the same size for feature extraction. Although this method is computationally efficient, the process of voxelization inevitably leads to the loss of information, which limits the improvement in the accuracy of the detection; The method based on point cloud and voxel fusion combines the advantages of the both methods to further improve the accuracy of 3D object detection, but its network framework is more large and has more model parameters; View-based methods are memory and computational efficient, but suffer from information loss when projecting the point cloud scene. Multimodal methods combine the rich semantic information from image data with the geometric and depth information from point cloud data for object detection. However, effective feature fusion is challenging due to the significant differences between the two data modalities. In

addition, multimodal networks have a larger capacity, resulting in increased time and computational requirements.

Most of the existing object detection networks focus on improving the detection accuracy, and the network structure is increasingly complex, which is not conducive to practical deployment. For the object detection task, combining both local contextual features and global features is crucial, making full use of contextual features to efficiently improve the detection performance of the detector [21]. In this paper, based on 3DSSD [19] and IA-SSD [22], we propose ESA-SSD, which is raw point cloud-based object detection network that can achieve multi-category detection.

Our ESA-SSD network captures neighborhood information at different scales at the same level through the M-SA module, which allows the network to aggregate information from a larger receptive field and reduces the impact of point cloud density. The geometric information and feature content of the points in the neighborhood are encoded by the enhanced feature expression (EFE) module, which makes full use of the geometric structure information and high-dimensional feature information, achieving significant improvement of the detection effect with lower cost. The introduction of semantic aware sampling (SAS) methods in the network enables the network to down-sample the point cloud scene selectively, which reduces the ineffective learning of the network and at the same time improves the ability of the network to capture the contextual information of the detected object. We incorporate spatial attention mechanisms [23] into the network to increase the weight of critical information while decreasing the weight of ineffective information, so that the network focuses more attention on critical information during the learning process. After encoding, each point carries a certain amount of semantic information, we predict the centroid using the contextual instance centroid perception (CICP) module to offset points belonging to the surface of the object towards the centroid, then features are aggregated to better capture the contextual features belonging to the object itself. Our network in achieved better detection results in the public datasets KITTI [24], DAIR-V2X [25].

The main contributions of this paper can be summarized as follows:

- We propose ESA-SSD for 3D object detection tasks, which further improves the object detection accuracy.
- The introduction of the enhanced feature expression Module improves the feature representation of point clouds, which makes full use of the given information of the point cloud data and improves the effectiveness of the existing network learning point cloud data.
- The proposed semantic aware sampling method enables the network to selectively down-sample, retaining more foreground points while reducing the ineffective learning of the network, which is more conducive to the regression of the bounding box.
- We introduce spatial attention to weight the point cloud features so that the network adaptively focuses on important features and suppresses irrelevant features.

2 Related work

With the rapid growth of computer vision applications, 3D object detection algorithms have also made significant progress. The most notable approach in this regard is the point-based method, which has evolved from the semantic segmentation networks PointNet [26] and PointNet++ [27, 28]. In 2019, Shi et al. proposed PointRCNN [14], a 3D object detection

network that directly utilizes point cloud data. In the first stage, the network employs PointNet++ to segment the input point cloud into foreground and background points. Based on the foreground points, 3D candidate boxes are generated. In the second stage, the network fuses the semantic features and local spatial features of the point cloud to regress the final 3D bounding boxes. In 2020, Yang et al. proposed a lightweight target detection framework, 3DSSD [19], which also uses the Set Abstraction module in PointNet++ for feature aggregation, but the network discards the upsampling layer and the refinement stage and uses a fused sampling strategy based on feature distances to avoid the performance degradation due to the absence of upsampling and to reduce computational cost. In 2021, Pan et al. explored the application of Transformers in 3D object detection and proposed the Pointformer [29] network. The Pointformer network is primarily based on the U-Net architecture. In each Pointformer block, it utilizes Local Transformers to learn object-level contextual features. These features are then fused with high-resolution global features using the Local-Global Transformer. Finally, the Global Transformer is employed to learn scene-level contextual features. Although the Pointformer network can further improve the detection accuracy of 3D object detection, applying Transformers directly to point cloud scenarios can significantly increase the computational cost, especially for large datasets.

Another typical approach is voxel-based 3D object detection algorithms. In 2018, Zhou et al. proposed the VoxelNet [20] framework for 3D object detection using voxelization. The network incorporates the Voxel Feature Encoding (VFE) module to fuse point features with locally aggregated features to obtain per-voxel features. Subsequently, 3D convolution is applied for global feature extraction. Finally, the Region Proposal Network (RPN) is used to generate 3D bounding boxes. Although VoxelNet achieves good detection performance, the computational cost of 3D convolution is significant. Therefore, in 2018, Yan et al. proposed SECOND [11] network for this problem. It utilizes sparse convolution for feature extraction, which greatly reduces the computational cost while maintaining effective performance. In 2019, Lang et al. proposed the PointPillars [12] network, which divides the point cloud scene into pillars from a bird's-eye view perspective. It extracts features for points within each pillar to obtain a feature vector specific to that pillar. This process converts the point cloud scene into a pseudo-image format, allowing the use of 2D object detection frameworks to generate the final 3D bounding boxes. PointPillars achieves high detection accuracy while maintaining fast detection speed. This is due to the absence of vertical partitioning and the use of the pseudo image representation for feature extraction. In 2021 Liu et al. proposed TA-Net [30] network architecture by combining attention mechanisms. The key information of the object is enhanced by processing each voxel using a stacked triple attention mechanism consisting of channel attention, point attention and voxel attention. After aggregating the features of each voxel by max-pooling, two-stage regression is used to use the rough regression results as anchor of fine regression, which further improves the detection accuracy of difficult cases at lower computational cost. In 2021, Zheng et al. proposed the CIA-SSD [13] network. This network incorporates a spatial semantic feature aggregation module to process the features extracted by the last sparse convolution layer. It effectively utilizes both low-level spatial features and high-level semantic features to further improve the accuracy of object localization and positive and negative sample classification. In the multi-task detection head, an IoU-aware confidence rectification module is employed to address the misalignment between classification confidence and localization accuracy. Additionally, Distance-variant IoU-weighted NMS is utilized as a post-processing step for predicted bounding boxes. This method incorporates the distance factor into the NMS algorithm, which results in smoother regressions and avoids redundant detection boxes.

Many researchers have combined point cloud-based and voxel-based methods to take full advantage of both methods. In 2020, Shi et al. proposed the PV-RCNN [15] network, which is a two-stage architecture. It utilizes SECOND as the first-stage detector to generate candidate boxes. Subsequently, a point-based method is employed to select a set of key points from the raw point cloud scene using farthest point sampling. Then, using the key points as centers, ball query algorithms are applied to aggregate features from the original point cloud and feature volumes at different scales onto the key points. The features of the key points are used to refine the candidate boxes generated in the first stage, resulting in the final 3D bounding boxes and further improving the detection accuracy. In 2021, Shi et al. proposed the PV-RCNN++ [16] network as a solution to the problems of slow detection speed and high network memory consumption in PV-RCNN. In order to make the sampled key points contain more foreground points and improve the sampling speed, the sectorized proposal-centric key point sampling strategy (SPCS) is proposed for sampling in the network. In addition, VectorPool aggregation is used for feature aggregation in the network, which improves the local feature aggregation capability while reducing the network memory consumption.

3 ESA-SSD network model

ESA-SSD is a single-stage network model, as shown in Fig. 1. The overall architecture includes the Multi-Set Abstraction (M-SA) module, which is responsible for aggregating local neighborhood features at multiple levels. This module encodes the input point cloud scene into a small set of key points, allowing these key points to contain contextual information with larger receptive fields.

Specifically, in the first level of the M-SA module, ESA-SSD uses Euclidean distance-based sampling (D-FPS) for down-sampling to obtain the key points, and then centers on the key points, selects radii of different sizes, and groups the point cloud scenes by ball query algorithm, which reduces the effect of point cloud density by aggregation of different scales of features at the same level. After the first M-SA module, we incorporate an enhanced feature expression (EFE) module to enhance the

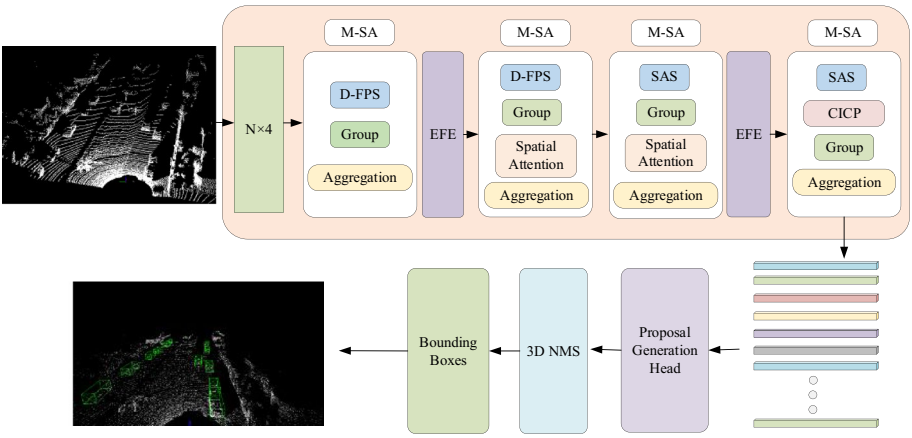

Fig. 1 ESA-SSD network model

feature expression of the point cloud. This module combines the geometric information and feature content of the point cloud, allowing to fully exploit the point cloud features extracted from the network. In the second level M-SA module, the D-FPS algorithm is also used to select the key points, and the Spatial attention mechanism (SAM) is used to enable the network to capture the key information about the object and to aggregate the contextual information to the key points. In the third level of the M-SA module, semantic aware sampling (SAS) is used to perform targeted down-sampling so that the key points contain more foreground points, and the spatial attention mechanism is introduced to weight the features, aggregating the more valuable information around the foreground points to the key points. The enhanced feature expression module is also introduced after the third level M-SA module. Similarly, in the fourth level of the M-SA module, the semantic aware sampling method is used for down-sampling, followed by using the contextual instance centroid perception module to offset the points on the surface of the object towards the center of the object to generate new key points, which further aggregates the high-dimensional feature information around the key points. The aggregated feature vectors serve as inputs for proposal generation heads to generate proposals, which are processed by 3D NMS (Non-Maximum Suppression) to obtain the final detection results.

3.1 Multi-set abstraction

The Multi-Set Abstraction (M-SA) module consists of three main parts: the sampling layer, the grouping layer, and the aggregation layer, as shown in Fig. 2. The sampling layer selects a set of points $c_p = \{c_1, c_2, \cdots, c_n\}$ from the input point cloud, which serve as the center points of local neighborhoods. We refer to these points as key points. The grouping layer constructs a local neighborhood set $S_i^{(k)}$ by retrieving points within the neighborhood of radius r_k around the sampled points c_i, as shown in Eq. (1).

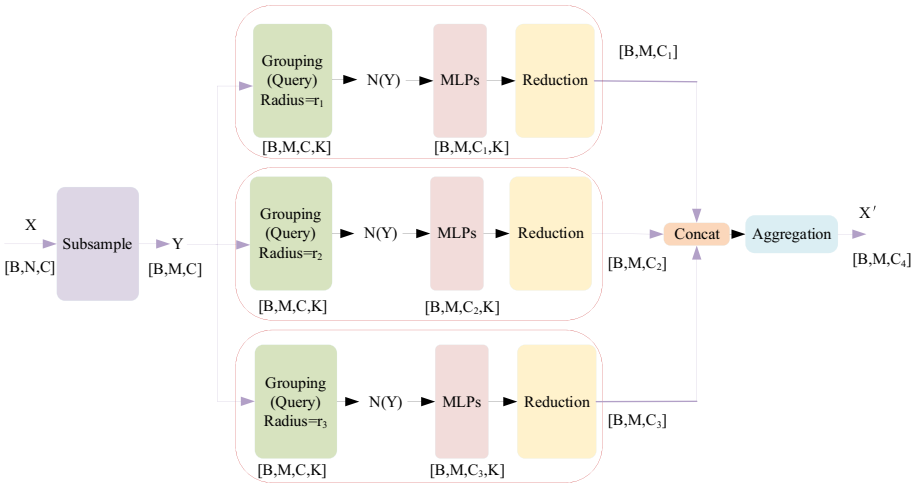

Fig. 2 Multi-Set Abstraction module

$$S_i^{(k)} = \left\{ [f_j^k; v_j^k - c_i]^T \middle| \begin{array}{c} \left\| v_j^k - c_i \right\|^2 < r_k \\ \forall v_j^k \in v^k \\ \forall f_j^k \in F^k \\ c_i \in c_p \end{array} \right\} \tag{1}$$

where $v_j^k - c_i$ represents the relative coordinates of the neighboring points with respect to the center point, and f_j^k represents the semantic features of the points in the neighborhood. Here, the feature vector of the points in the neighborhood is concatenated with the local relative coordinates, representing the relative positional relationship between the points in the neighborhood and the center point. The aggregation layer encodes the local neighborhood into a feature vector $\mathrm{f}_i^{(cv_k)}$, using methods such as Max-Pooling and Avg-Pooling. Here, we employ Max-Pooling for aggregation, as shown in Eq. (2).

$$\mathrm{f}_i^{(cv_k)} = \max\left\{ G(M(S_i^k)) \right\} \tag{2}$$

In the equation, $M(\cdot)$ represents randomly selecting a certain number of points from the neighborhood, $G(\cdot)$ represents the encoded features using a multi-layer perceptron, and $\max(\cdot)$ represents the aggregation of local features by performing max-pooling operation along the channel dimension. In Fig. 2, N denotes the number of points in the point cloud scene, M denotes the number of points obtained by down-sampling from the point cloud, K denotes the number of points selected within the ball neighborhood, and C, C1, C2, etc. denote the number of channels.

3.2 Enhanced feature expression module

The 2D-based deep learning network uses images as input, where pixels in the image data are densely arranged and regularly ordered, using sliding convolution with convolution kernels can extract rich pixel features and geometric features. For 2D image data, the core information is represented by RGB values. If we remove the RGB values from the image data, the image will become a blank grid, and all the information contained in the original image will be lost. For 3D point cloud data, even when we remove additional attributes such as RGB, intensity, etc., and only retain the 3D coordinates of the points, we can still recognize objects clearly. Therefore, for point cloud data, the geometric relationship between points is crucial. We utilize the enhanced feature expression module to fully exploit the geometric relationships between points. The network structure of the enhanced feature expression module is shown in Fig. 3.

After aggregating local features through the M-SA module, the three-dimensional coordinates of M points in the point cloud scene can be represented as $P = [p_1, p_2, \cdots, p_M] \in \mathbb{R}^{B \times M \times 3}$, where any individual point is represented as $P_i \in \mathbb{R}^3$. We utilize a CNN-based module to learn the feature mapping in a C-dimensional space, denoted as $F = [f_1, f_2, \cdots, f_M] \in \mathbb{R}^{B \times M \times C}$. The feature representation corresponding to point p_i is represented as $f_i \in \mathbb{R}^C$. In the enhanced feature expression module, the KNN (K-Nearest Neighbors) algorithm is used to select the k nearest neighbors for each point in the down-sampled point cloud scene. The k nearest neighbors of any point p_i are represented as $\forall p_{i_k} \in \omega(p_i)$. Constructing Local Geometric Graph for Each Sampled Point:

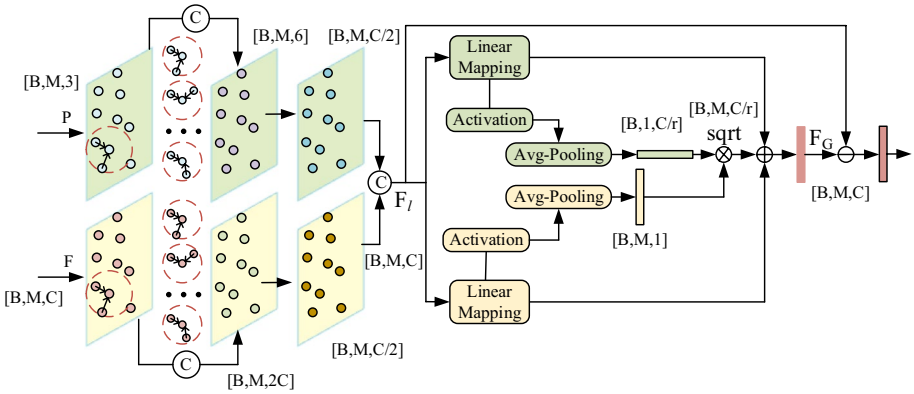

Fig. 3 Enhanced feature expression module

$$p_{i_g} = Concat(p_i, p_{i_k} - p_i) \in \mathbb{R}^{k\times 6} \tag{3}$$

The local geometric graph can be represented as $P_g = [p_{1_g}, p_{2_g}, \cdots, p_{M_g}] \in \mathbb{R}^{B\times M\times k\times 6}$. After constructing the global geometric graph, the local geometric graphs are encoded using a shared MLP (Multi-Layer Perceptron), and the local geometric graphs are aggregated using the max-pooling function, as shown in Eq. (4).

$$\hat{P} = Max\left(\mathrm{Re}\,lu\left(BN\left(MLP\left(P_g\right)\right)\right)\right) \in \mathbb{R}^{B\times M\times \frac{C}{2}} \tag{4}$$

Similarly, the k-nearest neighbor features for any point p_i are the features of the k points p_{i_k} that correspond to them. The local geometric feature map for each sampled point p_i is as follows:

$$F_{i_g} = Concat\left(f_i, f_{i_k} - f_i\right) \in \mathbb{R}^{k\times 2C} \tag{5}$$

The local feature map for all points can be represented as $F_g = \left[f_{1_g}, f_{2_g}, \cdots, f_{M_g}\right] \in \mathbb{R}^{B\times M\times k\times 2C}$. After constructing the global feature map, the local feature maps are encoded using a shared MLP (Multi-Layer Perceptron), and then aggregated, as shown in Eq. (6).

$$\hat{F} = Max\left(\mathrm{Re}\,lu\left(BN\left(MLP\left(F_g\right)\right)\right)\right) \in \mathbb{R}^{B\times M\times \frac{C}{2}} \tag{6}$$

Finally, we concatenate the local geometric context $\hat{P}$ and the local feature context $\hat{F}$ as the output of the local context module, as shown in Eq. (7).

$$F_l = Concat\left(\hat{P}, \hat{F}\right) \in \mathbb{R}^{B\times M\times C} \tag{7}$$

To enhance the feature expression of points at the global level, we fuse the channel-based information with the point-based information through the Global Bilinear Regularization (GBR) module. When encoding the global channel information, we use the weight matrix $W_c \in \mathbb{R}^{B\times C\times \frac{C}{r}}$ to encode the fused features F_l, which makes the network more lightweight. Then, a nonlinear activation function ReLU is applied to provide nonlinearity to the feature mapping. Finally, the average pooling function is used to

aggregate the spatial dimensions, compressing the spatial information into global channel information $g_c = \left[u_1, u_2, \cdots, u_{\frac{C}{r}}\right] \in \mathbb{R}^{B\times 1\times \frac{C}{r}}$, $u_j \in \mathbb{R}^1$ represents the global average feature of the j-th channel in the point cloud feature map. The encoding of global channel information can be represented by Eq. (8):

$$g_c = avg\left(\mathrm{Re}\,lu\left(F_l W_c\right)\right), g_c \in \mathbb{R}^{B\times 1\times \frac{C}{r}} \tag{8}$$

Where r is the reduction factor used to reduce the dimensionality of the feature channels, W_c is the weight matrix, and avg represents the average pooling function.

Similarly, by using the weight matrix $W_p \in \mathbb{R}^{B\times C\times \frac{C}{r}}$, the ReLU function, and average pooling operation along the channel dimension, we can obtain the global per-point information $g_p = \left[h_1, h_2, \cdots, h_M\right] \in \mathbb{R}^{B\times M\times 1}$, $h_j \in \mathbb{R}^1$ represents the global average response of the j-th point in the entire point cloud feature map. The encoding of global point information can be represented by Eq. (9):

$$g_p = avg\left(\mathrm{Re}\,lu\left(F_l W_p\right)\right), g_p \in \mathbb{R}^{B\times M\times 1} \tag{9}$$

Where W_p is the weight matrix.

As shown in Eq. (10), to better integrate channel-based information and point-based information, we use the square root of the outer product between g_c and g_p to capture the global bilinear response.

$$G = sqrt\left(g_c \otimes g_p\right), G \in \mathbb{R}^{B\times M\times \frac{C}{r}} \tag{10}$$

In this case, the elements of the i-th and j-th columns of the global bilinear response G are computed as follows:

$$n_{ij} = \sqrt{u_i h_j}, n_{ij} \in \mathbb{R} \tag{11}$$

The global channel information captures the interdependencies between channels in the point cloud scene, while the global per-point information represents the overall context. The bilinear combination of these two types of information fully preserves both types of global information. To preserve the original information, we use residual connections to add the encoded global channel information and global per-point information to the combined global information. Then using the shared fully-connected layer to restore the reduced dimensionality, as shown in Eq. (12).

$$F_G = M_\varphi\left(G + F_l W_c + F_l W_p\right), F_G \in \mathbb{R}^{B\times M\times C} \tag{12}$$

The global channel information and global per-point information are obtained by squeezing the global information in both the point and channel spaces using the average pooling function. However, to make the learned features more representative, we subtract F_G from the output F_l of the enhanced feature expression module to sharpen the learned features. We also apply an activation function δ to increase the non-linearity of the network, as shown in Eq. (13).

$$F_{out} = \delta\left(F_l - F_G\right), F_{out} \in \mathbb{R}^{B\times M\times C} \tag{13}$$

3.3 Semantic aware sampling

Through the grouping and aggregation operations of the two M-SA modules, the network learns point features that have a larger receptive field and richer semantic information. Additionally, it encodes the features of the entire point cloud scene onto a small number of key points. Since the key points are selected using the furthest point sampling algorithm, foreground points and background points are treated equally. This means that some key points may only represent background regions, while key points belonging to the foreground should contribute more to the regression of 3D bounding boxes and the background key points should have a smaller contribution. In the context of object detection tasks, foreground points closer to the center of the instance are more important compared to other foreground points. Assigning higher weights to points closer to the instance center would be beneficial for the regression of bounding boxes.

Based on the above, in order to preserve as many foreground points as possible in the down-sampled point cloud, we make full use of the latent semantic information of each point and incorporate foreground semantic priors into the training of the network to propose a semantic aware sampling method. The semantic aware sampling method consists of two components: predicting foreground point weights and predicting point position weights, as shown in Fig. 4. Specifically, we predict the weights for each key point and reweight the key point features through additional supervision from point cloud segmentation. Segmentation labels are generated directly from the 3D detection box annotations by checking that each key point is within the ground truth 3D bounding box. The features of each key point be weighted as follows:

$$f_{i_p} = Sigmoid\left(MLP\left(MLP\left(MLP\left(f_i\right)\right)\right)\right) \cdot f_i \tag{14}$$

We use three-layer MLP network and sigmoid function to predict the foreground confidence of key points. The weight component for predicting foreground points is trained using the focal loss function (15):

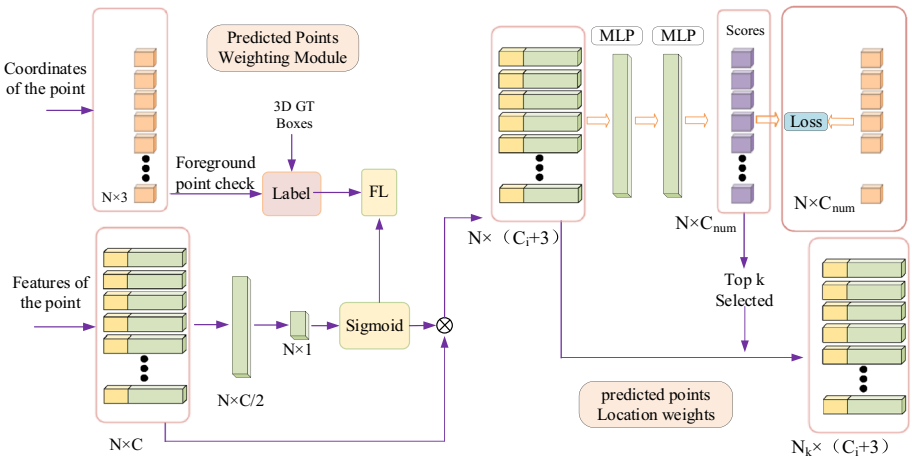

Fig. 4 Semantic aware sampling

$$L_{seg} = -\xi_a(1 - p^a)^\eta \log p^a \tag{15}$$

In Eq. (15), p^a represents the predicted probability of a point belonging to the foreground. The hyperparameters ξ_a and η are balance factors used to balance the proportion of foreground and background points. We set ξ_a and η to be 0.25 and 2.0, respectively.

The key point features that belong to the foreground have larger weights after the weighting process. We attach two MLP layers to the encoding layer to accurately estimate the semantic class scores for each point, enabling the network to achieve more targeted down-sampling. To assign higher weights to points closer to the center of the instance, we utilize the spatial positional relationship of each point within the ground truth bounding box. For a point i in a specific instance s within the point cloud scene, the mask of that point is defined according to Eq. (16), where points closer to the object center will be assigned higher mask scores:

$$Mask_{s_i} = \sqrt[3]{\frac{\min(f^*, b^*)}{\max(f^*, b^*)} \times \frac{\min(l^*, r^*)}{\max(l^*, r^*)} \times \frac{\min(u^*, d^*)}{\max(u^*, d^*)}} \tag{16}$$

where f^*, b^*, l^*, r^*, u^*, d^* represent the distances of the points within the bounding box to the six surfaces, respectively. During the network training process, the mask is multiplied by the foreground point loss based on the position of the points within the 3D bounding box. This allows for the assignment of different weights to points at different positions, effectively incorporating geometric priors into the network training process implicitly. The weight component for predicting the position of points is supervised using single-point semantic labels generated from the original bounding box annotations. It is trained using a weighted cross-entropy loss function, as shown in Eq. (17):

$$L_{sas} = -\sum_{c=1}^{C} \left(Mask_{s_i} s_i \log\left(\hat{s}_i\right) + \left(1 - s_i\right) \log\left(1 - \hat{s}_i\right) \right) \tag{17}$$

where C represents the number of classes, s_i is a one-hot label, and $\hat{s}_i$ is the predicted logits. During the inference process, the top K foreground points with the highest scores are retained as key points for the next encoding layer.

3.4 Spatial attention mechanism

In general, more parameters in deep learning networks indicate that the model is more expressive and stores more information. These large numbers of inputs are not all equally important, so we introduce spatial attention mechanisms that allow the network to adaptively focus on the more critical information among the many inputs, while reducing or filtering out irrelevant information. Figure 5 shows the network structure of spatial attention mechanism.

To compute the spatial attention map, we perform max-pooling and average-pooling operations along the channel dimension of the feature map $F \in \mathbb{R}^{B\times C\times M\times K}$, as shown in Fig. 5. Then, we concatenate the pooled feature maps $F_1 \in \mathbb{R}^{B\times 1\times M\times K}$ and $F_2 \in \mathbb{R}^{B\times 1\times M\times K}$. Next, we use convolutional layer to reduce the number of channels to 1. Finally, we apply the sigmoid activation function to obtain the spatial attention map. The obtained weight values are multiplied element-wise with the input feature map to obtain the weighted feature map. The calculation process is shown in Eq. (18):

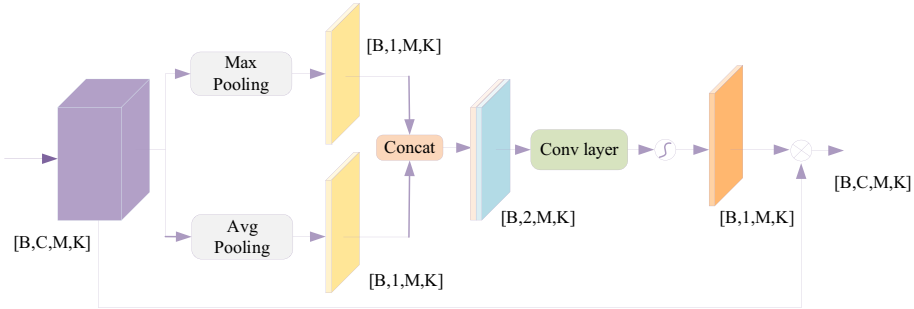

Fig. 5 Spatial attention mechanism

$$
\begin{aligned}
M_C(F) &= \delta(MLP(AvgPool(F)) + MLP(MaxPool(F))) \\
&= \delta\left(W_1\left(W_0\left(F^c_{avg}\right)\right) + W_1\left(W_0\left(F^c_{\max}\right)\right)\right)
\end{aligned}
\tag{18}
$$

3.5 Contextual instance centroid perception module

Since sensors such as LIDAR only capture information on the surface of the object, but the center of the object may be far away from the surface, and there is inherent sparsity in the point cloud data, these lead to difficulties in accurately regressing the bounding box with existing point-based detectors. While point-based detectors offer flexibility in choosing receptive fields, increasing the receptive field size can also result in capturing more objects and clutter within the neighborhood. This may not effectively capture the contextual features specific to the object itself. Therefore, we are inspired by the VoteNet [31] network to use the Hough voting mechanism to offset points located on the object's surface towards the center of the instance, aggregating contextual features centered on the new points generated after the offset. This is achieved through the contextual instance centroid perception module, as shown in Fig. 6.

Specifically, we utilize contextual features around the bounding box to predict the centroid of the instance. This involves predicting the offset between the points within the bounding box and the center of the instance, denoted as Δc_{ij}. Additionally, a regularization term is added to minimize the inaccuracy of centroid predictions. Each instance is voted

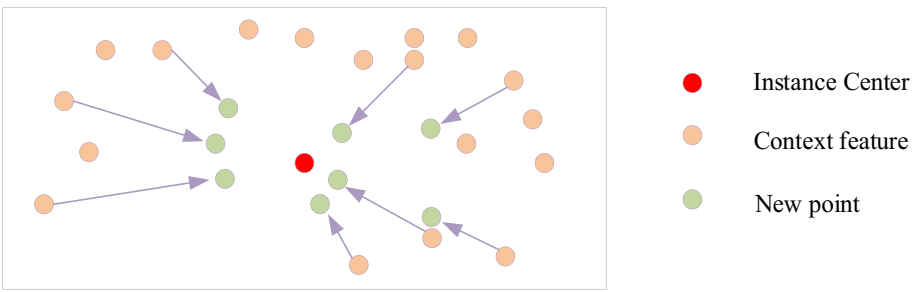

Fig. 6 Contextual instance centroid perception module

based on the aggregated contextual features of the object's surface. The loss function for centroid prediction is given by Eq. (19).

$$L_{cent} = \frac{1}{|F_+|}\frac{1}{|S_+|}\sum_i\sum_j\left(\left|\Delta\hat{c}_{ij} - \Delta c_{ij}\right| + \left|\hat{c}_{ij} - \bar{c}_i\right|\right)\cdot I_S(p_{ij}) \tag{19}$$

Where $\bar{c}_i = \frac{1}{|S_+|}\sum_j \hat{c}_{ij}, I_S : \mathrm{P} \rightarrow \{0,1\}$, Δc_{ij} represents the true value of the offset of point p_{ij} to the instance center, $\Delta\hat{c}_{ij}$ represents the predicted offset of point p_{ij} to the instance center, $|S_+|$ represents the number of points used to predict the instance center, and I_S is an indicator function used to determine whether point p_{ij} is used for estimating the instance center.

The points become even closer to the instance center after adding the offset. We use the generated new points as the center and aggregate contextual features using the M-SA module. Using the aggregated feature vectors input into the proposal generation header for 3D bounding box regression. We encode the proposals into multidimensional representations with size and orientation, using IoU threshold and 3D non-maximum suppression (3D-NMS) to process all the proposals and generate the final detection results.

3.6 Loss function

Our ESA-SSD network is end-to-end trained using a multi-task loss function for training and optimization. The total loss L_{total} is composed of the segmentation loss L_{seg} for the weighted foreground point prediction, the loss L_{sample} for the weighted position prediction of points, the centroid prediction loss L_{cent}, the classification loss L_{cls}, and the bounding box regression loss L_{box}, as shown in Eq. (20).

$$L_{total} = L_{seg} + L_{sample} + L_{cent} + L_{cls} + L_{box} \tag{20}$$

The regression loss of the bounding box includes position loss, size loss, and angle loss, as shown in the following equation:

$$L_{box} = L_{loc} + L_{size} + L_{angle-bin} + L_{angle-res} + L_{corner} \tag{21}$$

4 Experiments and results analysis

4.1 Experimental details

This experiment was conducted using the Pytorch deep learning framework on Ubuntu 18.04 operating system. The server was equipped with an NVIDIA GeForce RTX 3090 graphics processing unit (GPU). The training was performed using the ADAM optimizer with batch size 8 for a total of 80 epochs. The learning rate was dynamically adjusted using the cosine annealing decay strategy.

In this paper, we use KITTI [24] dataset and DAIR-V2X [25] dataset for training and evaluation. The KITTI dataset is one of the most competitive datasets in the field of autonomous driving. It consists of 7481 training samples and 7518 test samples. The dataset is divided into three detection levels based on the size or occlusion of the objects in each sample: easy, moderate, and hard. Like in references [15] and [22], we selected 6,000

samples out of the 7,481 training samples as the training set to train the model parameters. The trained model was then tested on the test set, and the test results were uploaded to the official KITTI evaluation server for evaluation. The DAIR-V2X dataset is the real road scenario of the Beijing High-Level Autonomous Driving Demonstration Area. Using the DAIR-V2X dataset is challenging because the point cloud scenarios in this dataset are more complex compared to the KITTI dataset, and the dataset contains data samples from bad weather conditions, such as fog scenarios when visibility is poor. We processed the dataset into the same format as KITTI and used 10,000 frames of point cloud samples as the training set to train the model parameters. We then evaluated the model using 4,464 frames of point cloud data from the test set to obtain the evaluation results.

4.2 Experimental results of KITTI dataset

We conduct experiments on the KITTI test set and submit it to the official KITTI server for evaluation and fair comparison with existing mainstream algorithms. We used the average precision (AP) at 40 recall positions as the evaluation metric, with the IoU threshold of 0.7 for the car category. The results of 3D Detection evaluation and BEV Detection evaluation of KITTI test server are shown in Table 1. From Table 1, it can be observed that our model achieved excellent detection performance in the car category. The 3D Detection results for

Table 1 KITTI test server 3D detection evaluation results

Method	Modality	Type	3D Car (IoU = 0.7)			BEV Car (IoU = 0.7)			3D-mAP
			Easy	Mod	Hard	Easy	Mod	Hard	
VoxelNet [20]	Voxel-based	1-stage	81.97	65.46	62.85	89.60	84.81	78.57	70.09
SECOND [11]		1-stage	84.65	75.96	68.71	91.81	86.37	81.04	76.44
PointPillars [12]		1-stage	82.58	74.31	68.99	90.07	86.56	82.81	75.29
3D IoU Loss [32]		1-stage	86.16	76.50	71.39	91.36	86.22	81.20	78.02
Associate-3Ddet [33]		1-stage	85.99	77.40	70.53	91.40	88.09	82.96	77.97
SA-SSD [34]		1-stage	88.75	79.79	74.16	<u>95.03</u>	<u>91.03</u>	85.96	80.9
CIA-SSD [13]		1-stage	89.59	80.28	72.87	93.74	89.84	82.39	80.91
TANet [30]		2-stage	84.39	75.94	68.82	91.58	86.54	81.19	76.38
Voxel-RCNN [17]		2-stage	<u>90.90</u>	<u>81.62</u>	<u>77.06</u>	94.85	88.83	86.13	<u>83.19</u>
Part-A^2 [35]		2-stage	87.81	78.49	73.51	91.70	87.79	84.61	79.94
Fast Point R-CNN [36]	Point-Voxel	2-stage	85.29	77.40	70.24	90.87	87.84	80.52	77.64
STD [18]		2-stage	87.95	79.71	75.09	94.74	89.19	<u>86.42</u>	80.92
PV-RCNN [15]		2-stage	90.25	81.43	76.82	94.98	90.65	86.14	82.83
HVPR [37]		1-stage	86.38	77.92	73.04	-	-	-	79.11
PointRCNN [14]	Point-based	2-stage	86.96	75.64	70.70	92.13	87.39	82.72	77.77
3D IoU-Net [38]		2-stage	87.96	79.03	72.78				79.92
Point-GNN [39]		1-stage	88.33	79.47	72.29	93.11	89.17	83.90	80.03
3DSSD [19]		1-stage	88.36	79.57	74.55	92.66	89.02	85.86	80.82
3DSSD†(Reproduced)		1-stage	87.73	78.58	72.01	-	-	-	79.44
3DSSD‡(OpenPCDet)		1-stage	87.91	79.55	74.71	-	-	-	80.72
IA-SSD [22]		1-stage	88.34	80.13	75.04	-	-	-	81.17
ESA-SSD (Ours)	Point-based	1-stage	**88.58**	**80.26**	**76.80**	**92.67**	**89.36**	**86.17**	**81.88**

The results of our ESA-SSD are shown in bold, and the best results are underlined

the easy, moderate, and hard levels reached 88.58%, 80.26%, and 76.80%, respectively. Compared to the IA-SSD network, our model showed improvements of 0.24%, 0.13%, and 1.76% in the respective levels. From the perspective of network input data type, our ESA-SSD surpasses mainstream networks such as PointRCNN [14] and 3DSSD [19]. In terms of network structure, the proposed ESA-SSD achieves detection accuracy that surpasses most one-stage networks and gradually approaches or even surpasses the detection accuracy of two-stage detection networks such as PV-RCNN [15] and STD [18] network models. From Table 1, it is evident that our ESA-SSD network also exhibits a significant advantage in BEV Detection. The detection accuracy for the three difficulty levels reaches 92.67%, 89.36%, and 86.17%, respectively. Compared to other methods, the excellent detection results achieved by ESA-SSD are mainly due to the reduction of ineffective learning during the training process, which allows the network to better capture the features of the objects of interest and to fully consider the geometric structural information specific to the point cloud data. Our semantic aware sampling is more sensitive to foreground points than the feature distance-based sampling used in 3DSSD networks. Compared to point-based networks such as IA-SSD, the enhanced feature expression module is able to utilize geometric information to take advantage of point cloud data.

To evaluate the accuracy of our network in angle detection, we conducted angle prediction on the KITTI test set. The experimental results show that for the car category, we achieved 95.70%, 94.96%, and 92.17% in the three difficulty levels, surpassing mainstream one-stage detectors. The experimental results are shown in Table 2. On moderate difficulty AOS|40, our ESA-SSD network shows at least 1.62% improvement over voxel-based methods and 3.19% improvement over point-based methods.

4.3 Experimental results of DAIR-V2X dataset

We further evaluate the detection performance of ESA-SSD on the DAIR-V2X dataset using the Average Precision (AP) metric with 11 recall positions and 40 recall positions. Table 3 presents the 3D detection results for 11 recall positions. The results show significant improvements of our ESA-SSD compared to the IA-SSD network for all three

Table 2 KITTI test server AOS|40 evaluation results

Method	Modality	Type	Car Orientation(AOS|40)		
			Easy	Mod	Hard
SECOND [11]	Voxel-based	1-stage	88.32	81.23	74.89
PointPillars [12]		1-stage	93.84	90.70	87.47
CIA-SSD [13]		1-stage	96.65	93.34	85.76
TANet [30]		2-stage	93.52	90.11	84.61
Part-A^2 [35]		2-stage	95.00	91.73	88.86
PV-RCNN [15]	Point-Voxel	2-stage	<u>98.15</u>	94.57	91.85
SE-SSD [40]		1-stage	96.55	<u>95.17</u>	90.00
PointRCNN [14]	Point-based	2-stage	95.90	91.77	86.92
Point-GNN [39]		1-stage	88.33	79.47	72.29
3D IoU Loss [32]		1-stage	95.60	90.21	84.96
ESA-SSD (Ours)	Point-based	1-stage	**95.70**	**94.96**	**<u>92.17</u>**

The results of our ESA-SSD are shown in bold, and the best results are underlined

Table 3 3D detection results for 11 recall positions on the DAIR-V2X dataset

Method	3D Car (IoU = 0.7)			3D Pedestrian(IoU = 0.5)			3D Cyclist (IoU = 0.5)			mAP
	Easy	Mod.	Hard	Easy	Mod.	Hard	Easy	Mod.	Hard	
PointPillars [12]	68.86	59.15	52.12	34.66	33.32	33.08	38.13	34.56	32.74	42.96
SECOND [11]	68.58	59.16	55.25	41.97	38.53	38.4	43.63	41.05	39.11	47.30
Parta2 [35]	69.66	60.37	56.82	47.92	45.01	44.49	49.17	46.58	44.96	51.66
PillarNet [41]	68.96	59.69	56.44	43.21	39.81	39.20	44.17	42.13	39.86	48.16
PointRCNN [14]	62.72	52.92	44.44	34.22	27.25	27.36	32.42	26.87	23.89	36.90
IA-SSD [22]	70.48	61.03	58.83	39.74	37.17	37.04	37.97	34.46	31.93	45.40
ESA-SSD(Ours)	**70.73**	**61.45**	**59.11**	**41.05**	**38.47**	**38.57**	**41.62**	**36.71**	**35.51**	**47.02**

The results of our ESA-SSD are shown in bold, and the best results are underlined

categories: cars, pedestrians, and cyclists. In the car category, our ESA-SSD achieves 70.48%, 61.16%, and 58.79% on three difficulty levels. However, the more complex scenario of the DAIR-V2X dataset causes the ESA-SSD network to show disadvantages compared to the two-stage network. For small objects like cyclists, the detection accuracy is not superior, reaching 41.12%, 35.91%, and 35.38% on the three difficulty levels. This is mainly due to the fact that the ESA-SSD network is an encoder architecture, which undergoes Multi-Set abstraction resulting in larger receptive fields, and has no refinement stage, so it has a greater advantage in detecting larger objects compared to detecting smaller ones. ESA-SSD has advantages in detecting larger objects and compared to the mainstream networks such as IA-SSD, PointPillars, and PointRCNN, ESA-SSD is competitive in detecting small objects.

Table 4 shows the experimental results for 3D detection with 40 recall positions. From the table, it is evident that our ESA-SSD still achieves excellent detection results. In the car category, it achieves detection accuracies of 72.7%, 61.15%, and 56.7%.

To test the detection performance of our network from the Bird's Eye View (BEV) perspective, we trained and evaluated it on the DAIR-V2X dataset. Tables 5 and 6 show the detection accuracies calculated for 11 recall positions and 40 recall positions, respectively. From the experimental results, it is evident that our ESA-SSD demonstrates good performance even in the BEV perspective.

Since our work is mainly inspired by IA-SSD, we compare the experimental results of ESA-SSD and IA-SSD individually in the form of histograms to further analyze the

Table 4 3D Detection results for 40 recall positions on the DAIR-V2X dataset

Method	3D Car (IoU = 0.7)			3D Pedestrian(IoU = 0.5)			3D Cyclist (IoU = 0.5)			mAP
	Easy	Mod.	Hard	Easy	Mod.	Hard	Easy	Mod.	Hard	
PointPillars [12]	69.51	57.69	53.14	31.65	29.75	29.85	35.62	31.16	29.31	40.85
SECOND [11]	69.72	57.16	54.44	39.78	36.13	35.89	41.3	38.67	36.8	45.54
Parta2 [35]	71.71	58.6	55.69	46.6	42.91	42.62	47.5	44.98	42.82	50.38
PillarNet [41]	69.73	57.85	55.12	41.32	37.29	36.88	42.38	39.71	37.63	46.43
PointRCNN [14]	65.52	50.76	43.4	31.57	23.63	22.71	29.28	22.43	20.8	34.46
IA-SSD [22]	71.43	59.62	56.66	37.17	33.92	33.82	35.56	31.19	29.4	43.20
ESA-SSD(Ours)	**73.21**	**61.62**	**56.99**	**38.92**	**35.41**	**35.27**	**39.35**	**33.77**	**31.83**	**45.15**

The results of our ESA-SSD are shown in bold, and the best results are underlined

Table 5 BEV Detection results for 11 recall locations on the DAIR-V2X dataset

Method	3D Car (IoU = 0.7)			3D Pedestrian(IoU = 0.5)			3D Cyclist (IoU = 0.5)			mAP
	Easy	Mod.	Hard	Easy	Mod.	Hard	Easy	Mod.	Hard	
PointPillars [12]	69.86	60.59	59.33	36.18	35.15	35.31	38.99	36.22	34.58	45.13
SECOND [11]	71.91	60.13	59.39	43.21	40.24	40.39	44.31	42.89	41.06	49.28
Parta2 [35]	69.98	60.81	59.85	49.50	46.63	46.23	50.15	49.08	47.66	53.32
PillarNet [41]	73.07	60.76	60.15	44.91	42.09	42.03	45.59	45.25	43.18	50.78
PointRCNN [14]	69.84	53.53	44.76	34.4	27.51	27.49	32.47	27.04	23.98	37.89
IA-SSD [22]	71.11	61.82	60.75	41.94	39.38	39.29	39.62	36.81	35.61	47.37
ESA-SSD(Ours)	**71.34**	**62.00**	**61.02**	**43.47**	**40.77**	**40.76**	**42.32**	**38.83**	**37.62**	**48.68**

The results of our ESA-SSD are shown in bold, and the best results are underlined

Table 6 BEV Detection results for 40 recall locations on the DAIR-V2X dataset

Method	3D Car (IoU = 0.7)			3D Pedestrian(IoU = 0.5)			3D Cyclist (IoU = 0.5)			mAP
	Easy	Mod.	Hard	Easy	Mod.	Hard	Easy	Mod.	Hard	
PointPillars [12]	72.08	60.32	57.79	33.36	31.88	32.14	36.61	33.06	31.47	43.19
SECOND [11]	72.63	59.8	58.74	41.02	38.05	38.06	42.33	40.97	39.1	47.85
Parta2 [35]	72.36	60.74	58.05	48.25	45.1	44.97	48.78	47.58	45.45	52.36
PillarNet [41]	73.36	60.67	58.18	43.07	39.77	39.64	43.88	43.15	41.24	49.22
PointRCNN [14]	68.08	51.26	46.09	31.81	24.48	23.14	29.42	22.78	21.04	35.34
IA-SSD [22]	73.82	62.15	59.44	39.26	36.39	36.48	36.66	34.14	32.48	45.65
ESA-SSD(Ours)	**75.50**	**62.38**	**61.39**	**41.12**	**38.37**	**38.44**	**40.07**	**36.67**	**34.95**	**47.65**

The results of our ESA-SSD are shown in bold, and the best results are underlined

superiority of our proposed network. Figure 7 shows the detection accuracy comparison between IA-SSD and ESA-SSD. ESA-SSD that we proposed utilizes the geometric structure information of point cloud data and preserves the foreground points in the scene largely, which make it learn more valuable features of the objects. The advantage of ESA-SSD can be seen clearly from the bar chart.

4.4 Ablation experiments

To evaluate the effectiveness of the individual components of the proposed network, we performed ablation experiments. The experiment design consists of three separate experiments and one overall experiment. In real-world autonomous driving scenarios, the car category is relatively more crucial. Therefore, we conducted experiments with three difficulty levels of IOU thresholds (0.7, 0.7, 0.7) specifically for the car category. The ablation experiments were evaluated using Average Precision (AP) at both 11 recall positions and 40 recall positions. The experimental results are shown in Tables 7 and 8. In the first experiment, farthest point sampling is utilized as the sampling method for the third and fourth layers. In the second experiment, the Enhanced Feature Expression (EFE) module is introduced to the first experiment to fully demonstrate the effectiveness of the EFE module. In the third experiment, the farthest point sampling is replaced in the third and fourth layers of the second experiment with our semantic aware sampling method. The experimental

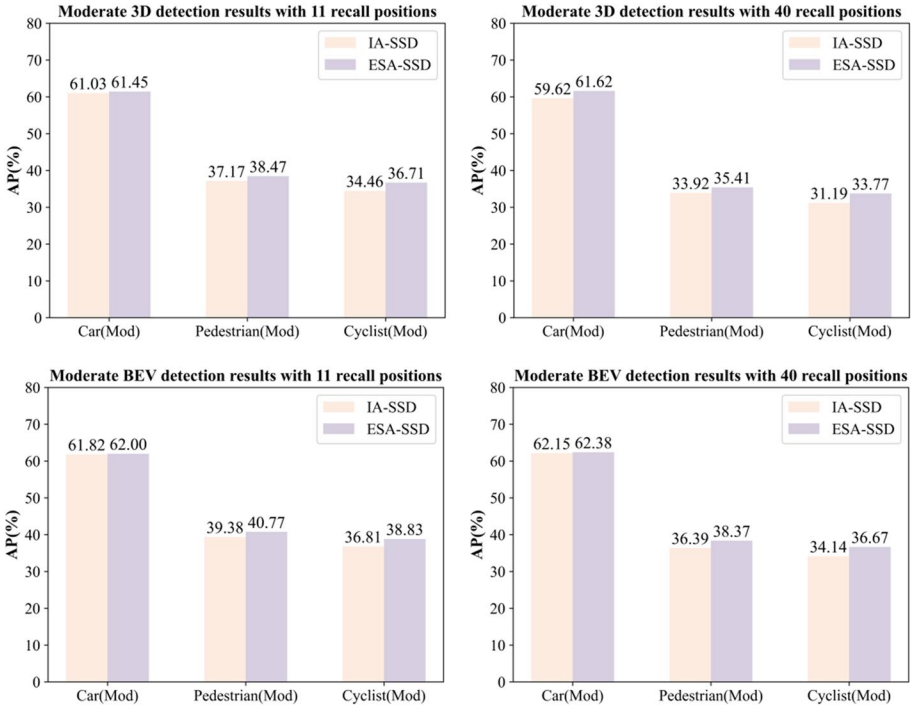

Fig. 7 Comparison of test results between IA-SSD and ESA-SSD

results show that the semantic aware sampling method is superior to the farthest point sampling method and can preserve more foreground points during down-sampling. The fourth experiment was to add spatial attention to the network, and the experimental results showed that the spatial attention mechanism enabled the network to adaptively focus on the information that is more critical to the current task among the many inputs, and the detection results were further improved.

4.5 Visualization of test results

To show the qualitative results, we visualize the detection results using the Open3D library. The 2D image data scene and the 3D real point cloud data scene are shown in Fig. 8, respectively. It is evident that the proposed ESA-SSD network accurately localizes the objects. In complex autonomous driving scenarios, our network delivers excellent detection results.

5 Conclusion

In this paper, we propose a single-stage point cloud object detector, ESA-SSD. The network takes the input point cloud data and encodes the point cloud scene into a small number of key points after multi-level down-sampling and feature aggregation. Using the enhanced feature expression module to fully exploit the given information of the point cloud data

Fig. 8 Visualization of test results

Table 7 Results of ablation experiments for 11 recall locations

Method						3D Car (IoU = 0.7)			BEV Car (IoU = 0.7)		
						Easy	Mod	Hard	Easy	Mod	Hard
EFE	D-FPS	D-FPS	SAS	SAS	SAM	-	-	-	-	-	-
	√	√				70.11	60.73	58.91	70.86	61.69	60.72
√	√	√				70.23	60.85	59.00	70.98	61.73	60.73
√			√	√		70.66	61.26	59.02	71.24	61.87	60.86
√			√	√	√	**70.73**	**61.45**	**59.11**	**71.34**	**62.00**	**61.02**

Our ESA-SSD results are shown in bold

improves the effectiveness of network learning. We propose targeted down-sampling using semantic aware sampling methods to ensure that the network is able to sample as many foreground points as possible, which improves the utilization of foreground points. Spatial attention mechanisms are introduced into the network to focus the network on the more

Table 8 Results of ablation experiments for 40 recall locations

Method						3D Car (IoU = 0.7)			BEV Car (IoU = 0.7)		
						Easy	Mod	Hard	Easy	Mod	Hard
EFE	D-FPS	D-FPS	SAS	SAS	SAM	-	-	-	-	-	-
	√	√				72.48	59.36	56.51	73.77	62.08	59.45
√	√	√				72.66	59.48	56.59	73.92	62.16	59.50
√			√	√		73.03	61.42	56.85	75.37	62.24	61.19
√			√	√	√	**73.21**	**61.62**	**56.99**	**75.50**	**62.38**	**61.39**

Our ESA-SSD results are shown in bold

critical information for the current task. In addition, the contextual instance center-of-mass perception module is used in the network for instance centroid prediction, thus making full use of the contextual features of the object. The ESA-SSD network has been experimentally validated using the KITTI and DAIR-V2X datasets. The experimental results demonstrate that our ESA-SSD network achieves excellent detection performance. However, Our ESA-SSD network still needs improvement in detecting small objects. In our future research, we will focus on addressing this issue to enhance the performance of small object detection.

Funding This work was funded by National Natural Science Foundation of China (Under Grant: 62176018).

This work was funded by University Innovation Fund of China for Production, Education and Research (Under Grant: 2022IT229).

Data availability All data in the manuscript can be found at: https://www.cvlibs.net/datasets/kitti/ and https://thudair.baai.ac.cn/index. All other data are available from the authors upon reasonable request.

Declarations

Conflict of interest All authors certify that they have no affiliations with or involvement in any organization or entity with any financial interest or non-financial interest in the subject matter or materials discussed in this manuscript.

References

1. Redmon J, Divvala S, Girshick R, Farhadi A (2016) You only look once: unified, real-time object detection. In: Proceedings of the IEEE Conference on Computer Vision and Pattern Recognition, pp 779–788
2. Gupta S, Devi DTU (2020) YOLOv2 based real time object detection. Int J Comput Sci Trends Technol IJCST 8:26–30
3. Redmon J, Farhadi A (2018) YOLOv3: an incremental improvement. In: Proceedings of the IEEE/CVF conference on computer vision and pattern recognition. https://doi.org/10.48550/arXiv.1804.02767
4. Liu W, Anguelov D, Erhan D, Szegedy C, Reed S, Fu CY, Berg AC (2016) Ssd: Single shot multibox detector. In: Computer Vision–ECCV 2016: 14th European Conference, Amsterdam, The Netherlands, October 11–14, 2016, Proceedings, Part I 14. Springer International Publishing, pp 21–37. https://doi.org/10.1007/978-3-319-46448-0_2
5. Girshick R, Donahue J, Darrell T, Malik J (2014) Rich feature hierarchies for accurate object detection and semantic segmentation. In: Proceedings of the IEEE Conference on Computer Vision and Pattern Recognition, pp 580–587

6. Girshick R (2015) Fast r-cnn. In: Proceedings of the IEEE International Conference on Computer Vision, pp, 1440–1448
7. Ren S, He K, Girshick R, Sun J (2017) Faster R-CNN: towards real-time object detection with region proposal networks. In: IEEE Transactions on Pattern Analysis & Machine Intelligence 39(6):1137–1149
8. Qi D, Tan W, Yao Q, Liu J (2022) YOLO5Face: why reinventing a face detector. In: European Conference on Computer Vision. Springer Nature Switzerland, Cham, pp 228–244
9. Laroca R, Severo E, Zanlorensi LA, Oliveira LS, Gonçalves GR, Schwartz WR, Menotti D (2018) A robust real-time automatic license plate recognition based on the YOLO detector. In: 2018 International Joint Conference on Neural Networks (IJCNN). IEEE, pp 1–10. https://doi.org/10.1109/IJCNN.2018.8489629
10. Sun K, Xiao B, Liu D, Wang J (2019) Deep high-resolution representation learning for human pose estimation. In: Proceedings of the IEEE/CVF conference on computer vision and pattern recognition, pp 5693–5703
11. Yan Y, Mao Y, Li B (2018) SECOND: sparsely embedded convolutional detection. Sensors 18(10):3337. https://doi.org/10.3390/s18103337
12. Lang AH, Vora S, Caesar H, Zhou L, Yang J, Beijbom O (2019) Pointpillars: fast encoders for object detection from point clouds. In: Proceedings of the IEEE/CVF Conference on Computer Vision and Pattern Recognition, pp 12697–12705. https://doi.org/10.1109/CVPR.2019.01298
13. Zheng W, Tang W, Chen S, Jiang L, Fu CW (2021) Cia-ssd: Confident iou-aware single-stage object detector from point cloud. In: Proceedings of the AAAI Conference on Artificial Intelligence 35(4):3555–3562. https://doi.org/10.1609/aaai.v35i4.16470
14. Shi S, Wang X, Li H (2019) Pointrcnn: 3d object proposal generation and detection from point cloud. In: Proceedings of the IEEE/CVF Conference on Computer Vision and Pattern Recognition, pp 770–779
15. Shi S, Guo C, Jiang L, Wang Z, Shi J, Wang X, Li H (2020) PV-RCNN: Point-Voxel Feature Set Abstraction for 3D Object Detection. In: Proceedings of the 2020 IEEE/CVF Conference on Computer Vision and Pattern Recognition (CVPR), 10529–10538. https://doi.org/10.1109/CVPR42600.2020.01054
16. Shi S, Jiang L, Deng J, Wang Z, Guo C, Shi J, Wang X, Li H (2023) PV-RCNN++: point-voxel feature set abstraction with local vector representation for 3D object detection. Int J Comput Vis 131(2):531–551
17. Deng J, Shi S, Li P, Zhou W, Zhang Y, Li H (2021) Voxel r-cnn: towards high performance voxel-based 3d object detection. In: Proceedings of the AAAI Conference on Artificial Intelligence 35(2):1201–1209. https://doi.org/10.1609/aaai.v35i2.16207
18. Yang Z, Sun Y, Liu S, Shen X, Jia J (2019) Std: Sparse-to-dense 3d object detector for point cloud. In: Proceedings of the IEEE/CVF International Conference on Computer Vision(ICCV), pp 1951–1960. https://doi.org/10.1109/ICCV.2019.00204
19. Yang Z, Sun Y, Liu S, Jia J (2020) 3dssd: Point-based 3d single stage object detector. In: Proceedings of the IEEE/CVF Conference on Computer Vision and Pattern Recognition(CVPR), 11040–11048 https://doi.org/10.1109/CVPR42600.2020.01105
20. Zhou Y, Tuzel O (2018) Voxelnet: end-to-end learning for point cloud based 3d object detection. In: Proceedings of the IEEE Conference on Computer Vision and Pattern Recognition, pp 4490–4499
21. Qiu S, Anwar S, Barnes N (2021) Pnp-3d: a plug-and-play for 3d point clouds. IEEE Trans Pattern Anal Mach Intell 45(1):1312–1319
22. Zhang Y, Hu Q, Xu G, Ma Y, Wan J, Guo Y (2022) Not all points are equal: Learning highly efficient point-based detectors for 3d lidar point clouds. In: Proceedings of the IEEE/CVF Conference on Computer Vision and Pattern Recognition (CVPR), pp 18953–18962. https://doi.org/10.1109/CVPR52688.2022.01838
23. Woo S, Park J, Lee JY, Kweon IS (2018) Cbam: Convolutional block attention module. In: Proceedings of the European Conference on Computer Vision (ECCV), pp 3–19
24. Geiger A, Lenz P, Urtasun R (2012) Are we ready for autonomous driving? The kitti vision benchmark suite. In: IEEE Conference on Computer Vision and Pattern Recognition. IEEE, pp 3354–3361. https://doi.org/10.1109/CVPR.2012.6248074
25. Yu H, Luo Y, Shu M, Huo Y, Yang Z, Shi Y, Guo Z, Li H, Hu X, Yuan J, Nie Z (2022) Dair-v2x: A large-scale dataset for vehicle-infrastructure cooperative 3d object detection. In: Proceedings of the IEEE/CVF Conference on Computer Vision and Pattern Recognition(CVPR), pp 21361–21370. https://doi.org/10.1109/CVPR52688.2022.02067
26. Qi CR, Su H, Mo K, Guibas LJ (2017) Pointnet: Deep learning on point sets for 3d classification and segmentation. In: Proceedings of the IEEE Conference on Computer Vision and Pattern Recognition, pp 652–660

27. Qi CR, Yi L, Su H, Guibas LJ (2017) Pointnet++: deep hierarchical feature learning on point sets in a metric space. In: Advances in neural information processing systems, pp 5099–5108
28. Liu H, Tian S (2023) Deep 3D point cloud classification and segmentation network based on GateNet. Visual Comput 1–11.https://doi.org/10.1007/s00371-023-02826-w
29. Pan X, Xia Z, Song S, Li LE, Huang G (2021) 3d object detection with pointformer. In: Proceedings of the IEEE/CVF Conference on Computer Vision and Pattern Recognition, pp 7463–7472
30. Liu Z, Zhao X, Huang T, Hu R, Zhou Y, Bai X (2020) Tanet: Robust 3d object detection from point clouds with triple attention. In: Proceedings of the AAAI Conference on Artificial Intelligence, 34(07):11677–11684. https://doi.org/10.1609/aaai.v34i07.6837
31. Qi CR, Litany O, He K, Guibas LJ (2019) Deep hough voting for 3d object detection in point clouds. In: Proceedings of the IEEE/CVF International Conference on Computer Vision, pp 9277–9286
32. Zhou D, Fang J, Song X, Guan C, Yin J, Dai Y, Yang R (2019) Iou loss for 2d/3d object detection. In: 2019 International Conference on 3D Vision (3DV). IEEE, pp 85–94
33. Du L, Ye X, Tan X, Feng J, Xu Z, Ding E, Wen S (2020) Associate-3Ddet: Perceptual-to-conceptual association for 3D point cloud object detection. In: Proceedings of the IEEE/CVF Conference on Computer Vision and Pattern Recognition, pp 13329–13338. https://doi.org/10.1109/CVPR42600.2020.01334
34. He C, Zeng H, Huang J, Hua XS, Zhang L (2020) Structure aware single-stage 3d object detection from point cloud. In: Proceedings of the IEEE/CVF Conference on Computer Vision and Pattern Recognition, pp 11873–11882. https://doi.org/10.1109/CVPR42600.2020.01189
35. Shi S, Wang Z, Shi J, Wang X, Li H (2020) From points to parts: 3d object detection from point cloud with part-aware and part-aggregation network. IEEE Trans Pattern Anal Mach Intell 43(8):2647–2664
36. Chen Y, Liu S, Shen X, Jia J (2019) Fast point r-cnn. In: Proceedings of the IEEE/CVF International Conference on Computer Vision, pp 9775–9784
37. Noh J, Lee S, Ham B (2021) Hvpr: Hybrid voxel-point representation for single-stage 3d object detection. In: Proceedings of the IEEE/CVF Conference on Computer Vision and Pattern Recognition, pp 14605–14614
38. Li J, Luo S, Zhu Z, Dai H, Krylov AS, Ding Y, Shao L(2020) 3D IoU-Net: IoU guided 3D object detector for point clouds. In: Proceedings of the IEEE/CVF conference on computer vision and pattern recognition. https://doi.org/10.48550/arXiv.2004.04962
39. Shi W, Rajkumar R (2020) Point-gnn: graph neural network for 3d object detection in a point cloud. In: Proceedings of the IEEE/CVF Conference on Computer Vision and Pattern Recognition, pp 1711–1719. https://doi.org/10.1109/CVPR42600.2020.00178
40. Zheng W, Tang W, Jiang L, Fu CW (2021) SE-SSD: Self-ensembling single-stage object detector from point cloud. In: Proceedings of the IEEE/CVF Conference on Computer Vision and Pattern Recognition, pp 14494–14503
41. Shi G, Li R, Ma C (2022) Pillarnet: real-time and high-performance pillar-based 3d object detection. In: European Conference on Computer Vision, pp 35–52

Publisher's Note Springer Nature remains neutral with regard to jurisdictional claims in published maps and institutional affiliations.

Springer Nature or its licensor (e.g. a society or other partner) holds exclusive rights to this article under a publishing agreement with the author(s) or other rightsholder(s); author self-archiving of the accepted manuscript version of this article is solely governed by the terms of such publishing agreement and applicable law.